Synthesis Report

Report Number : ADTB-RR-0011

Project Name	:	Aeromechanical Design of Turbine Blades (ADTurB)
Contract Number	:	BRPR-CT95-0124
Project Number	:	BE95 - 1836
Project Coordinator	:	Rolls-Royce plc
Partners	:	Rolls-Royce plc GB Snecma Moteurs FR FiatAvio IT Turbomeca FR RR Deutschland DE ITP ES ONERA FR DLR DE University of Limerick IE University of Oxford GB EPFL CH KTH SE
Ref Period	:	1st February 1996 - 30 September 2000
Duration	:	52 Months
Issue Date	:	January 2001

Project Funded by the European Community
Under the Industrial & Material Technologies
Programme (Brite-EuRam III)

1.0 Summary

Aero-engine manufacturers need to eliminate high cycle fatigue failures to improve aircraft safety, engine reliability and cost of ownership. Additionally there is a strong need to be able to predict vibration levels to reduce lead times and to expand the freedom of the turbine blade designer to explore more optimal designs.

The objectives of this project are to provide good quality data with which to validate current and future prediction software, and to compare a variety of approaches to give an “exchange rate” between cost and accuracy.

To achieve these objectives, 2 experimental campaigns were devised. The first rig at EPFL was used to verify the superposition principle for forced response, since many prediction methods already assume that the aerodynamic force and the aerodynamic damping can be calculated independently. The second rig at DLR provided aerodynamic and vibration response validation data for a realistic turbine stage. The measurement programme was designed to allow validation at all stages through-out the prediction process so that error errors can be accurately pinpointed.

The project has fulfilled its objectives. A database of the results was established and populated during the project, enabling an accessible record of all the results and also easy comparison of data from any source. The results show that many aspects of the prediction process are well modelled, but the prediction of unsteady aerodynamics remains the largest contributor to error.

Additionally the DLR rig showed a significant low engine order response and this will provide a useful “head start” for the follow on project: ADTurB II.

Keywords*: aero-engine, turbine, vibration, aeroelasticity, forced response.*

2.0 CONTENTS

3.0 The Consortium

The project consisted of the following partners. The details of the prime contact are given with a description of the organisation and their particular contribution to this project.

Rolls-Royce plc

J.S.Green
Mechanical Methods (ML-78)
Rolls-Royce plc
P.O.Box 31
Derby DE23 8BJ
UK.
Tel: +44 1332 245453
Fax: +44 1332 245672
Jeffrey.Green@rolls-royce.com

As a manufacturer of aero-engines, Rolls-Royce competes on an equal footing with the principal US engine manufacturers and supplies engines for civil transport aircraft ranging from small business jets to the largest transport aircraft (including the A380). Rolls Royce is also involved in manufacture of turbomachinery for power generation and marine applications.

Contribution:
Overall project coordinator.
Design of new (flexible) rotor .
Mechanical, aerodynamic and forced response analysis

Snecma Moteurs

Marc Berthillier
YLED / Méthodes Dynamiques
Snecma
Centre de Villaroche
F-77550 MOISY CRAMAYEL
France
Tel: +33 1.60.59.93.74
Fax: +33 1.60.59.80.25

Snecma designs, develops, manufactures and sells aero-engines. Snecma is one of the world's four largest aircraft engine manufacturers. With over 50 years experience as an aero-engine manufacturer, Snecma designs engines which power medium range Airbus, Boeing and McDonnel Douglas aircraft flying under the colours of 150 airlines.

Contribution:
Task Leader for Task 2 – analysis.
Assembly of flexible rotor including strain gauge application
Aerodynamic, forced response and mistuning analysis

Rolls-Royce Deutschland

Joachim Villwock
Strukturmechanik
Rolls-Royce Deutschland
Eschenweg 11
D-15827 Dahlewitz
Germany
Tel: +49 337086 1256
Fax: +49 337086 3296

For more than 35 years Rolls-Royce Deutschland (formerly BMW Rolls-Royce GmbH), has been engaged in the development, manufacture and maintenance of gas turbines and has gained a wide experience of the theoretical and experimental analysis of turbomachinary components.

Contribution:
Fatigue tests on flexible blades.
Mechanical, aerodynamic and forced response analysis

Turbomeca

Bernard Lalanne
Chef du Service Résistance des Matériaux
Turbomeca, groupe Snecma
F-64 511 Bordes Cedex
France
Tel: +33 5.59.12.52.36
Fax: +33 5.59.12.51.32

After 55 years in the field of turbomachinery, with today more than 42,000 engines of its own design in service throughout the world, Turbomeca is one of the major international manufacturers in the highly competitive field of small and medium size gas turbines (100 to 5000 kW).

Contribution:
Modal tests on blade alone.
Strain gauge calibration of blades.
Mechanical, aerodynamic and forced response analysis

ITP

Enrique Triana
Engineering Department
Industria de Turbo Propulsores (ITP)
Parque Emperesaial – San Fernando
Avda. Castilla, 2
Edificio Japon
E-28830 SanFernando De Henares. Spain
Tel: +34 91 655 9455
Fax: +34 91 676 4676

ITP is a recently created company (1989) which will develop and manufacture, in Spain, elements of gas turbines. It will collaborate with international industrial groups of manufacturers in new aero-engine studies and designs, as well as improving existing turbines.

Contribution:
Manufacture of additional solid blades for instrumentation
Steady & unsteady aerodynamic calculations.

FiatAvio

Vincenzo Cirillo
Mechanics & Structural Integrity
FiatAvio SpA
Viale Impero, 75
I-80038 Pomigliano d'Arco
Italy
Tel: +39 081 316 3353
Fax: +39 081 316 3787

FiatAvio (formerly Alfa Romeo Avio) is currently developing an advanced high temperature demonstration unit.Therefore, the company is at the present deeply involved in theoretical and Experimental studies in aerodynamic, thermal and mechanical design.

Contribution:
Aero design of a new stator with different numbers off.
Design of the rotor assembly.
Linear mechanical modelling with and without mistuning

DLR

Jochen Amecke
Institut für Antriebstechnik
Deutsches Zentrum für Luft- und Raumfahrt e.V.
Bunsenstraße 10
D-37073 Göttingen
Germany
Tel: +49 551 709 2183
Fax: +49 551 709 2806

DLR has been involved in research activities within all fields of aero-engine research for more than 75 years.

Contribution:
Task Leader for Task 4 - the experiment at DLR.
Provision of major test facility including technical support staff
Manufacture of all static parts in the rig.

KTH

Torsten Fransson
Heat and Power Technology
KUNGI TEKNISKA HÖGSKOLAN (KTH)
S-10044 Stockholm
Sweden
Tel: +46 8 790 7475
Fax: +46 8 204161

The chair of the heat and power technology (HPT) and the Royal Institute of Technology (KTH) has been involved in research and development of gas turbines since the 1940's. The main research fields are biomass combustion for gas turbines, three-dimensional steady state turbine aerodynamics and aeroelasticity in turbomachines.

Contribution:
Task Leader for Task 1 – integration
Management of the database
Steady and Unsteady aerodynamic analysis.
Flow measurement using L2F techniques on DLR rig.

ONERA

Antoine Foumaux
Structures Dept ONERA 29,
avenue de la Division Leclerc
B.P. No 72
F-92322 Châtillon Cedex
France
Tel: +33 1 4673 4310
Fax: +33 1 4673 4146

ONERA was founded in 1946 as a scientific and technical public establishment, managed according to industrial and commercial practice, enjoying financial autonomy and placed under the authority of the Minister of Defence. ONERA has great experience in numerical and experimental turbomachinery domains.

Contribution:
Steady & unsteady aerodynamic calculations

EPFL

Fabrice Rottmeier
LTT-DGM
École Polytechnique Fédérale de Lausanne (EPFL)
CH - 1015 Lausanne
Switzerland
Tel: +41 21 693 7323
Fax: +41 21 693 3502

The 'Laboratoire de thermique appliquée et de Turbomachines (LTT)' is part of the 'Ecole Polytechnique Fédérale de Lausanne (EPFL)', which comprises 2500 workers (scientific and staff), and 5000 students. Main R & D activities of LTT are testing and computation on aerodynamics, heat transfer and mechanical domains.

Contribution:
Task Leader for Task 3 – EPFL Experiments
Provision of facilty and all support.
Design and manufacture of all hardware for EPFL
Steady & unsteady aerodynamic calculations

University of Limerick

Mark Davies
Department of Mechanical and Aeronautic Engineering
University of Limerick
Plessey Park
Limerick
Ireland
Tel: +353 61 202467
Fax: +353 61 202393

The University of Limerick has experience in the development of frequency response instrumentation and in the design, manufacture and testing of highly compact surface mounted boards.

Contribution:
Design and manufacture of rotating electronics, including signal conditioning and transfer to non-rotating frame.

University of Oxford

Roger Ainsworth
Department of Engineering Science.
University of Oxford
Parks Road
Oxford OX1 3PJ
England
Tel: +441865 288728
Fax: +44 1865 288756

The University of Oxford is an academic institution of world class standing dedicated to teaching and research. The department of Engineering Science has a Turbomachinary group which has been established for 28 years and has always worked closely with industry.

Contribution:
Application and calibration of unsteady pressure instrumentation.

4.0 Technical Achievements

4.1 Goals & Objectives

The goal of this project was to investigate turbine blade forced response. Forced response in gas turbines can lead to high cycle fatigue failure if not kept properly under control. This type of failure is very difficult to monitor in service and can lead to sudden unexpected failure and associated damage and risk to aircraft safety.

The engine manufacturers drive to eliminate high cycle fatigue failures to improve aircraft safety and easier management of engine maintenance. A lack of validated design tools may cause the blade designer to compromise component efficiency due to concern about vibration, which may be unfounded.

Forced response problems in turbines fall into 2 categories; wake passing and low engine order. The low engine order problem is much more difficult so this project focuses on wake passing. In particular the objectives of the project were:

- to gain an improved understanding of the phenomena involved,
- to obtain good quality validation data for existing and future prediction software.
- to identify benefits and pitfalls of a variety of prediction methods.

4.2 DLR Experiments.

4.2.1 Overview

To investigate blade forced response effects in a high pressure turbine stage two experiments have been performed. A major coordinated effort amongst the partners was required to design, manufacture, instrument and assemble the rig in the windtunnel of rotating cascades RGG at the German Aerospace Centre DLR in Göttingen.

The first experiment uses an existing “rigid” rotor and deals with the identification of the aerodynamic forcing functions. The second experiment used a new designed rotor with “flexible” blades, using the same airfoil, which has targeted resonant frequencies within the rig running range. Both experiments provide a database for the validation of forced response prediction codes for high pressure turbines.

In order to be able to change the blade passing/disturbance frequency on the rotor over a wide range two stators with different number of blades are used for the investigations. A first stator with 43 blades and a second with 70 blades was designed and manufactured.

4.2.2 Test Facility

The layout of the wind tunnel for rotating cascades (RGG) at DLR Göttingen is given in Figure 1.

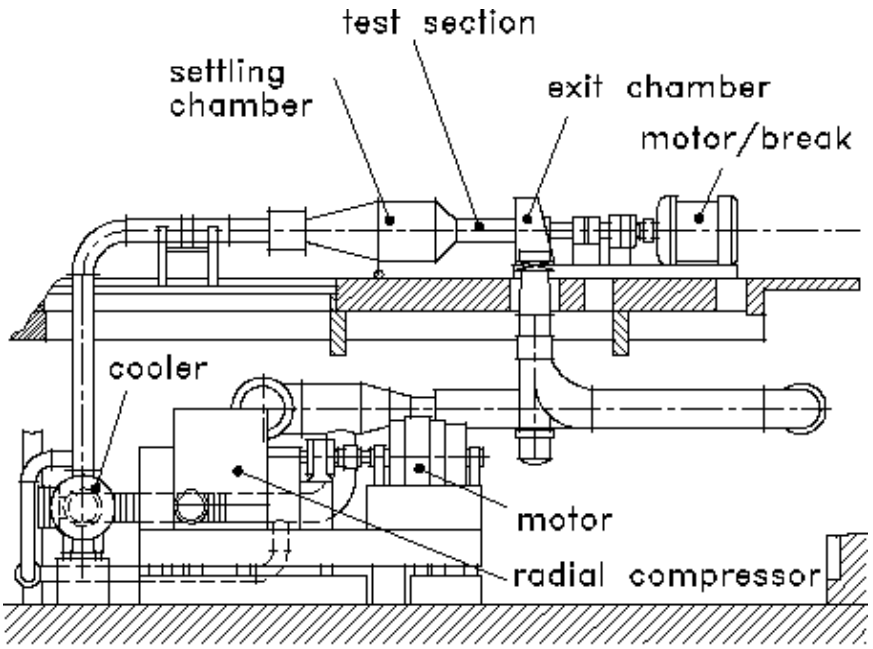

Figure 1 - Windtunnel layout.

The RGG was designed and built for the testing of annular cascades for turbines and compressors in a wide range of parameters. A closed circuit allows continuous operation at a constant flow rate of 15.5 m^3/s and a maximum pressure ratio of 6 with a minimum upstream temperature of approximately 300 K. Mach and Reynolds number can be varied independently within certain limits. The speed control of the test rotor is provided by an electric motor/generator with a maximum power of 500 KW, which allows driving and braking in both directions of rotation. Possible rotational speeds of the rotor are between 0 and 10,000 RPM.

A schematic view of the annular test section flow path of the RGG with the ADTurB stage is given in **Figure 2**.

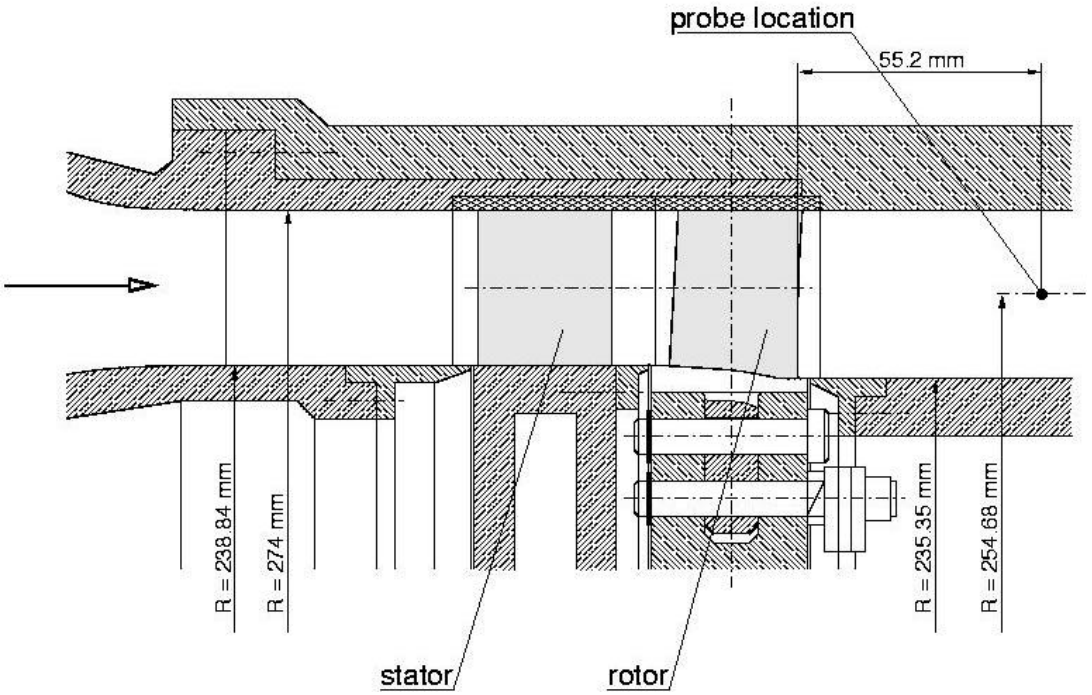

Figure 2. Meridional view of annular test section.

4.2.3 Flow Experiments.

Measurements of the flow were made during both “rigid” and “flexible” rotor experiments. These rotors had identical aerofoil geometry and operating conditions.

The objective of the experiments was to measure the flow at rotor resonant conditions.

Rigid Rotor

The blades of the rigid rotor had their natural frequency far beyond the operating range, giving 2 advantages: (a) any vibration of the blades and the aerodynamic damping behaviour can be neglected, and (b) blades can be run for long duration without fear of failure.

The rig operating conditions for these tests were set by the dynamic behaviour of the flexible rotor. The design of the flexible rotor ensured that certain targeted modes of vibration were excited in the rig speed range, but required the use of 2 different nozzle guide vanes to achieve this. The rotor speed at which these resonances were predicted to occur were used as a primary parameter defining the operating point.

The rigid rotor was used primarily for study of the flow in the stage. Flow probes were used to measure the time-average aerodynamic parameters and provide realistic boundary conditions for analysis. The main unsteady measurements were made using a 3D Laser-Two-Focus system which were used to measure instantaneous flow velocity a mid channel height for the highest priority operating points. Figure 3 shows time averaged Mach Number (relative to each blade row) in the stage measured using theL2F system.

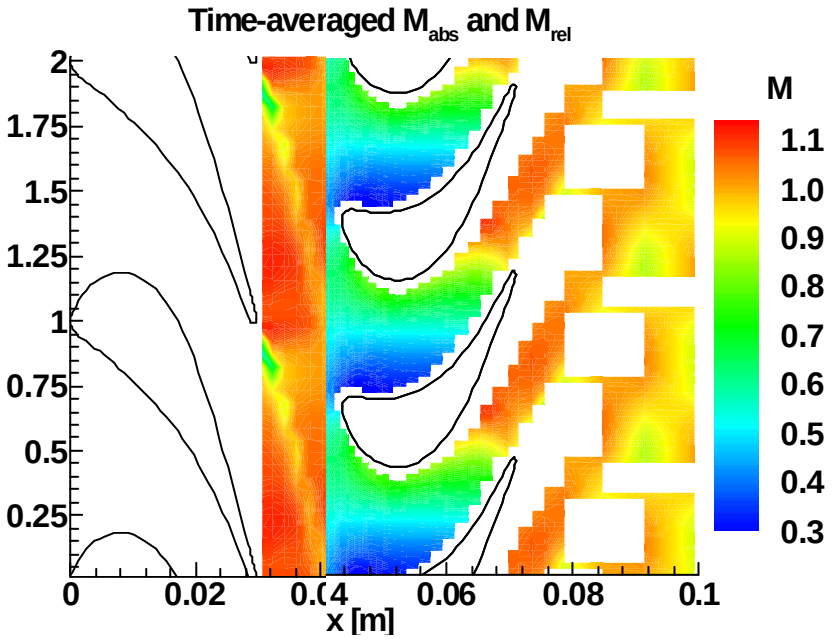

Figure 3 - Time Averaged Flow Field (Mach Number).

Flexible Rotor

The flexible rotor was run transiently to reduce the risk of blade failure and simulate more closely a typical industrial engine strain gauge test procedure. During these accelerations of the rotor, unsteady pressure measurements were taken using “kulites” on the blade surface at mid height.

Figure 4 shows the frequency content of the Kulite signals during the acceleration; (a) covers wake passing frequency while (b) covers twice wake passing frequency.

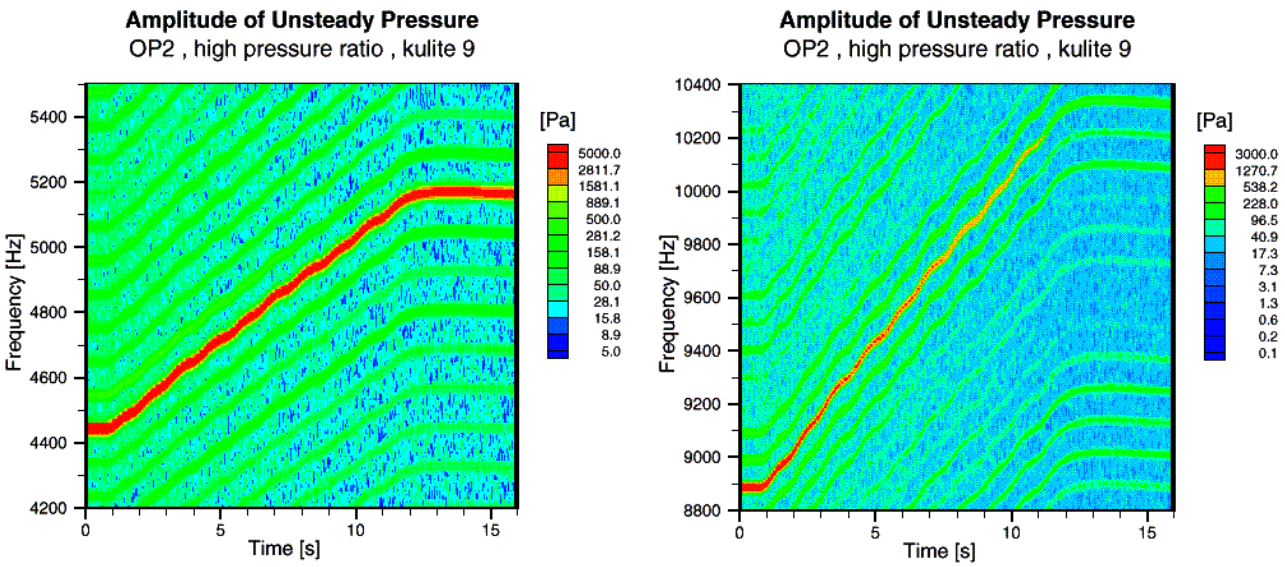

(a) Wake Passing Frequency Range *(b) Twice Wake Passing Frequency*

Figure 4 – Frequency Content of Kulite Signal on Rotor surface.

Several characteristics can be clearly seen from these figures:-

- The signals are rather orderly with very little truly random content.
- The strong signals can be seen at rig orders which are not a multiple of the number of NGVs.
- The relationship between first and second harmonic changes through the acceleration.

4.2.4 Vibration Response Experiment.

Figure 5 shows the modeshapes that were excited in the rig operating range. The modeshapes and frequency have been confirmed by testing.

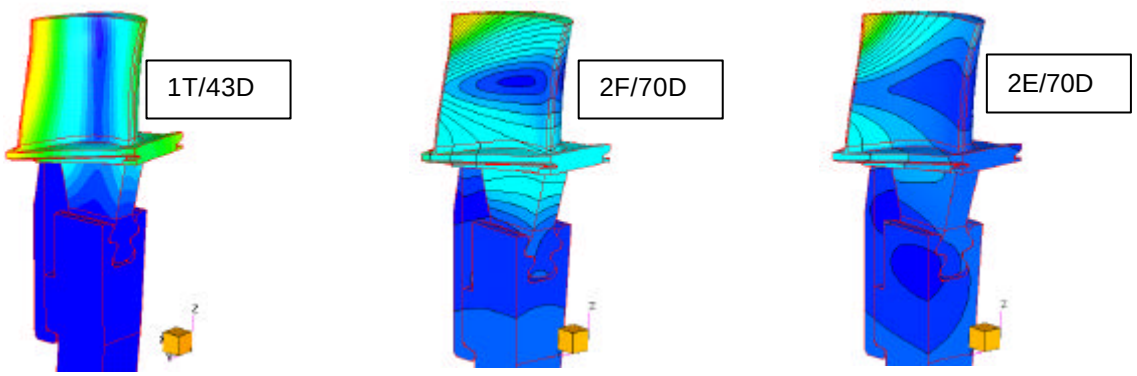

Figure 5 – Vibration Modeshapes – Contours show resultant displacement.

The response of these modes were measured simultaneously with the unsteady pressure (Kulite) measurements described earlier. Strain gauges positioned on the shank were calibrated to give a reading of vibration amplitude at the aerofoil tip trailing edge corner.

Figure 6 shows the frequency content of the strain gauge signal during a typical acceleration of the rotor. The first torsion mode can be clearly seen at 4800 Hz for this blade with evidence of other mistuned modes within the range 4600 to 4900 Hz. Again the wake passing frequency is visible and also a vibration response to the other frequencies within the pressure signal (shown in fig 4(a)).

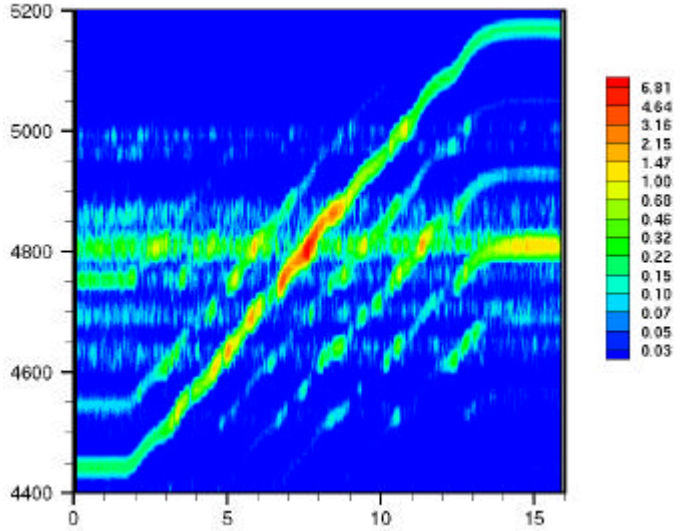

Figure 6 – Frequency content of Strain Gauge Signal

The resonant amplitude of each blade to the wake passing can be determined from figures such as this and tabulated to give an overview of the mistuned response of the rotor.

During testing significant vibration responses were seen of the first flap mode due to Low Engine Order excitation. It is not clear where this excitation comes from but the most likely source is variability in the NGV throat widths.

A follow on programme: ADTurBII has been funded to further investigate both mistuning phenomena and Low Engine Order excitation and response.

4.3 EPFL Experiments

The objectives of the experiments at EPFL was to determine whether the superposition principle is applicable for forced response. The vast majority of forced response methods calculate the aerodynamic forcing function and aerodynamic damping separately and combine them later during the calculation of vibration response. The implication of the result is whether a forced response prediction must be a fully coupled aero-mechanical calculation with associated computational expense or whether it can be done in 2 uncoupled parts.

Flow measurements were made, particularly unsteady blade surface pressures for 4 configurations:

(a) steady flow (datum),
(b) unsteady flow due to controlled vibration,
(c) unsteady flow due to upstream wakes,
(d) unsteady flow due to vibration and upstream wakes.

The Non-Rotating Annular Test Facility of the "Laboratoire de Thermique Appliquée et de Turbomachines" (LTT) at EPFL was chosen for these series of unsteady flow measurements for 2 modes of vibration: bending and torsion. Figure 7 shows the layout of the rig.

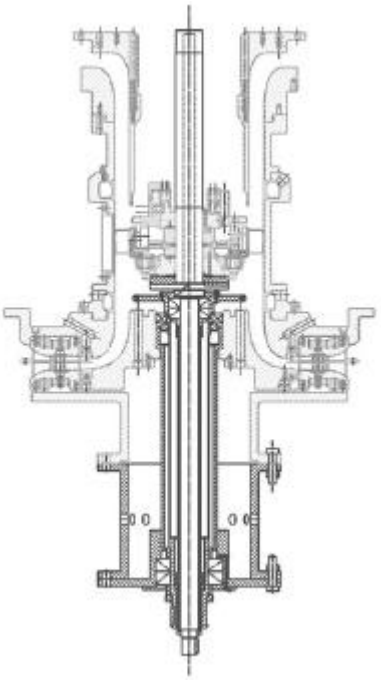

(a) Overview of Facility *(b) Cross-section*

Figure 7 - Non-Rotating Annular Test Facility at EPFL.

The principle of this unique test facility is to avoid the rotation of the measuring equipment by keeping the rotor fixed but to swirl the air instead to obtain the same relative velocity profile as in an axial turbomachine. This feature is realized by the combination of a radial-axial nozzle and pre-swirl vanes with variable pitch on two different sectors. The excitation effect of a stator row on a rotor row of a real turbomachine is simulated by the rotation of a strutted disk upstream of the fixed measuring cascade.

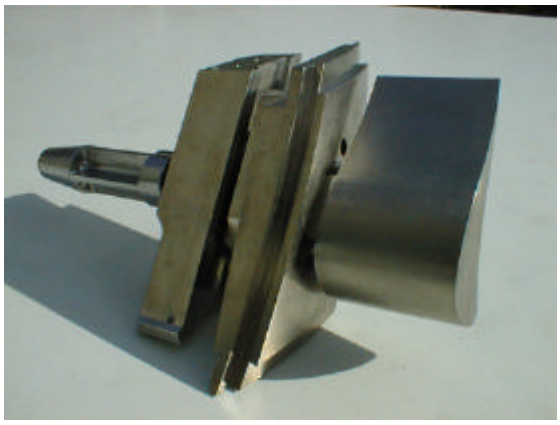

Figure 8 – Rotor Mounting Arrangement

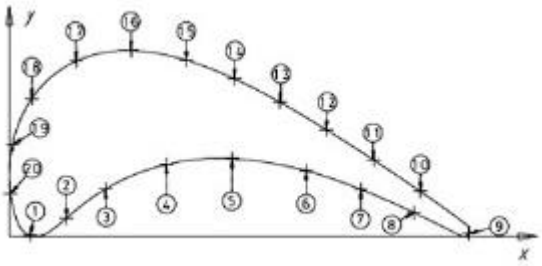

Figure 9 – Rotor Instrumentation

The aerofoil is prismatic turbine blade, whose profile was based on the mid-section of the turbine blade used for the DLR experiments. It is mounted so that it can be excited in either in a bending or torsion mode.

Figure 8 shows the torsion blade vibration system. It consists of a metallic spring, a mass, a blade base and the blade itself. Both bending and torsion systems have been designed to have around the same eigen frequency in order to have comparable reduced frequencies between the torsion and bending measurements.

The cascade's instrumentation consists of three pairs of blades equipped with pressure taps (12 on the suction side of a blade and nine on the pressure side of the neighboring blade) at 25%, 50% and 90% blade height.

4.4 Analysis and Integration

The purpose of the analysis within this project was twofold. Firstly to support the experiment by checking the consistency of the measured data and aiding the interpretation of the measured results. Secondly, to compare various methods for prediction for forced response, providing an indication of the accuracy versus computational cost relationship. To achieve this partners did not necessarily use their most advanced software but sometimes used simpler approaches in order to give a more complete picture of the range of approaches.

At its crudest, the prediction process can be expressed as follows:-

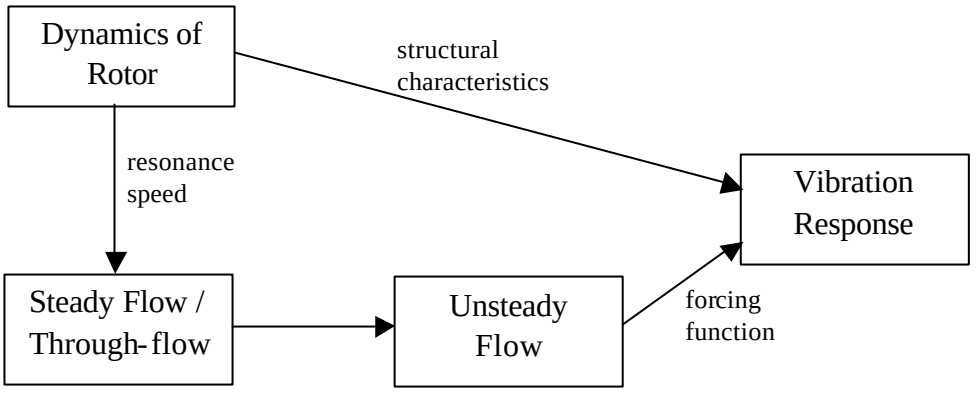

Figure 1 – Generic Forced Response Flowchart.

The experimental data and analyses were organised such that, should there be any difference between them, it would be possible to pinpoint the source of any error within the overall process.

The general conclusions were that the mechanical issues were relatively easy to predict apart from the level of mechanical damping to expect. The steady aerodynamics was reasonably under control but the unsteady aerodynamics was the main source of error. It was not possible to show a strong correlation between the complexity of the model and the quality of the results for the unsteady aerodynamics.

A database was prepared to hold all results was from the project. A special format for the data was devised and each partner populated the database routinely as each experiment or analysis was completed. In this way the comparison of various approaches with the experimental data has been relatively simple.

5.0 Exploitation Plans & Follow Up Actions

The main deliverables of the project have been:-

(a) a set of data with which to validate current and future forced response analysis methods.
(b) guidance on the applicability of a range of analysis methods for forced response.
(c) Improvement of experimental facilities and practices available within Europe.
(d) Training & education of staff

5.1 Validation Database

Each of the industrial partners will use these results to aid the validation of their own software methods. The data covers measurements to verify each stage of the process so that any deficiencies in an analysis system can be pinpointed.

Industrial partners are already beginning to use the methods to influence design decisions. In fact at least one engine has already been certified which has used this technology. The use is expected to increase over the next few years, becoming common practice.

Some unexpected additional data was measured. In particular, the flexible rotor showed a strong response to low engine order vibration. The throat areas of the NGV were also measured so these results will be used as an early indication of any issues related to low engine order predictions.

5.2 Method Applicability

During the course of the project it become obvious that certain analysis methods were unattractive, while for others increasing analysis complexity gave diminishing returns. For example, the use of a simplified shell element model for mistuning was found to be more time consuming and less accurate than the modal synthesis approach. This information will be used by the industrial partners to guide their future research effort.

5.3 Improvement of Facilities

The facilities at EPFL have improved significantly with the introduction of upstream struts to simulate NGV wakes. The improvements on the DLR rig have been less dramatic but still significant. DLR plan to equip themselves with the analysis capability to check the consistency of measurements and boundary conditions. This will enable the research establishments and universities to attract further research funding.

These rigs are available for industrial funded research which can benefit directly from the improvements. Both of these rigs will also be used in the follow on project (ADTurBII) using these improved facilities.

5.4 Training and Education

More than 50 people have contributed to the work in this project, all of whom have learned about aerodynamic or mechanical issues. Three people have used much of the work as the basis of a PhD. At least 2 researchers have already transferred to industry to directly apply their skills. These benefits are expected to continue through the strong relationships among the partners.

5.5 Follow-on Research Project

A further European Commission funded research project has been started. The project, called ADTurBII, will focus on the low engine order vibration, friction and mistuning of turbine blades using each of the rigs described here. Four new partners have been attracted to joint the new project and each will bring a particular expertise in friction or mistuning.

6.0 References.

Below is a list of the publications from researchers within the project.

[1] "Aerodynamic Performance of Two Isolated Stators in Transonic Annular Cascade Flow."
Freudenreich K., Jöcker M., Rehder H-J., Höhn W., Fransson T.H.
3rd European Conference on Turbomachinary – Fluid Dynamics and Thermodynamics, London, 2-5 March 1999.

[2] "Application of Three Dimensional Laser-Two-Focus Anemometry to Transonic Turbine Flow: Example of an Isolated Stator."
Freudenreich K., Fransson T.H.
14th Symposium on Measurement Techniques for Transonic and Supersonic Flow in Cascades and Turbomachines, Limerick, 2-4 September 1998

[3] "Velocity and Turbulence Intensity Measurements in Two Annular Stator Configurations Using a Three-Dimensional Laser-Two-Focus Anemometer"
Teknologie Licentiat Thesis of K Feudenreich, KTH, Stockholm.

[4] "Parametric Gust Investigations in High Pressure Turbines"
Freudenreich K., Jöcker M., Fransson T.H.
9th International Symposium on Unsteady Aerodynamics, Aeroacoustics and Aeroelasticity of Turbomachines, Lyon, France, 4-7 September 2000.

[5] "Parameteric Studies of the Aerodynamic Excitation in High Pressure Turbines"
Jöcker M., Freudenreich K., Fransson T.H., Rehder H-J.
9th International Symposium on Unsteady Aerodynamics, Aeroacoustics and Aeroelasticity of Turbomachines, Lyon, France, 4-7 September 2000.

[6] "Gust and Forcing Function in a Transonic Turbine"
Freudenreich K., Jöcker M., Fransson T.H.
4th European Conference on Turbomachinary – Fluid Dynamics and Thermodynamics, Firenzo (Florence), 20-23 March 2001.

[7] "Experimental Investigation of a Vibrating Axial Turbine Cascade in Presence of Upstream Generated Gusts"
Rottmeier F., Hagenah B., Bölcs A.
9th International Symposium on Transport Phenomena and Dynamics of Rotating Machinary – Turbomachines Aeroelasticity, Honolulu, USA, 10-14 February 2002.

[8] "Evaluation of Two Competitive Approaches for Simulating the Time-Periodic Flow in an Axial Turbine Stage"
Billonnet G., Fourmaux A., Toussaint C.
4th European Conference on Turbomachinary – Fluid Dynamics and Thermodynamics, Firenzo (Florence), 20-23 March 2001.

[9] "Application of Three Dimensional Laser-Two-Focus Anemometry to Unsteady Flow in a Transonic Turbine Stage"
Freudenreich K., Fransson T.H.
15th Symposium on Measuring Techniques in Transonic and Supersonic Flow in Cascades and Turbomachines, Firenze, 21-22 September 2000

[10] "A Fluid Structure Interfacing Technique for Computational Aeroelastic Simulations"
Moyroud F., Cosme N., Jöcker M., Fransson T.H., Lornage D., Jaquet-Richardet G.
9th International Symposium on Unsteady Aerodynamics, Aeroacoustics and Aeroelasticity of Turbomachines, Lyon, France, 4-7 September 2000.