Hypmoces

http://hypmoces.deimos-space.com/

HYPersonic MOrphing for a Cabin Escape System (HYPMOCES)

Project Coordinator: Davide Bonetti davide.bonetti@deimos-space.com Tel: +34 91 806 3450
DEIMOS Space S.L.U. Ronda de Poniente, 19 Edificio FITENI VI, 2-2 28760 Tres Cantos (Madrid), Spain

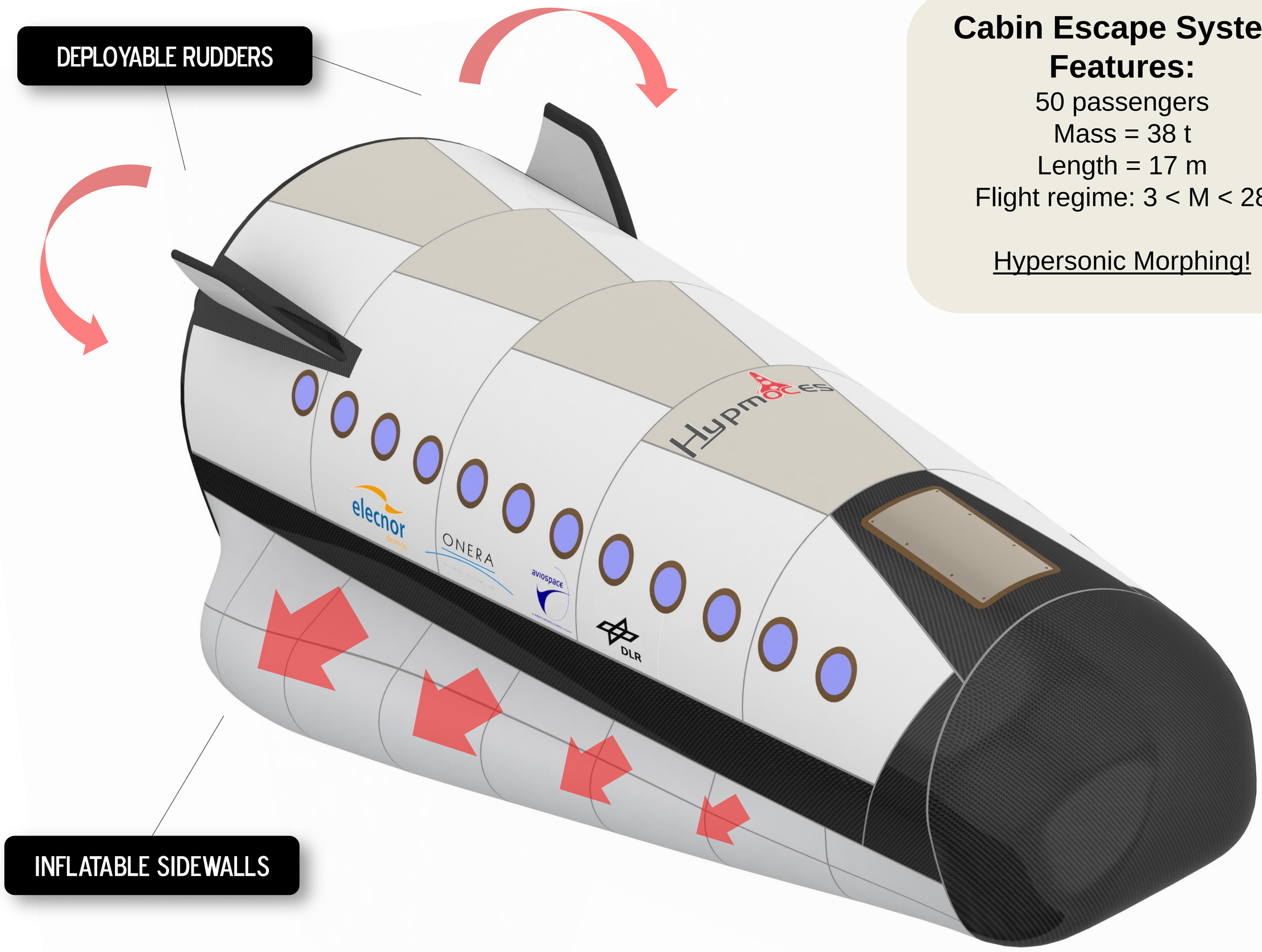

Cabin Escape System Features:

50 passengers
Mass = 38 t
Length = 17 m
Flight regime: 3 < M < 28

Hypersonic Morphing!

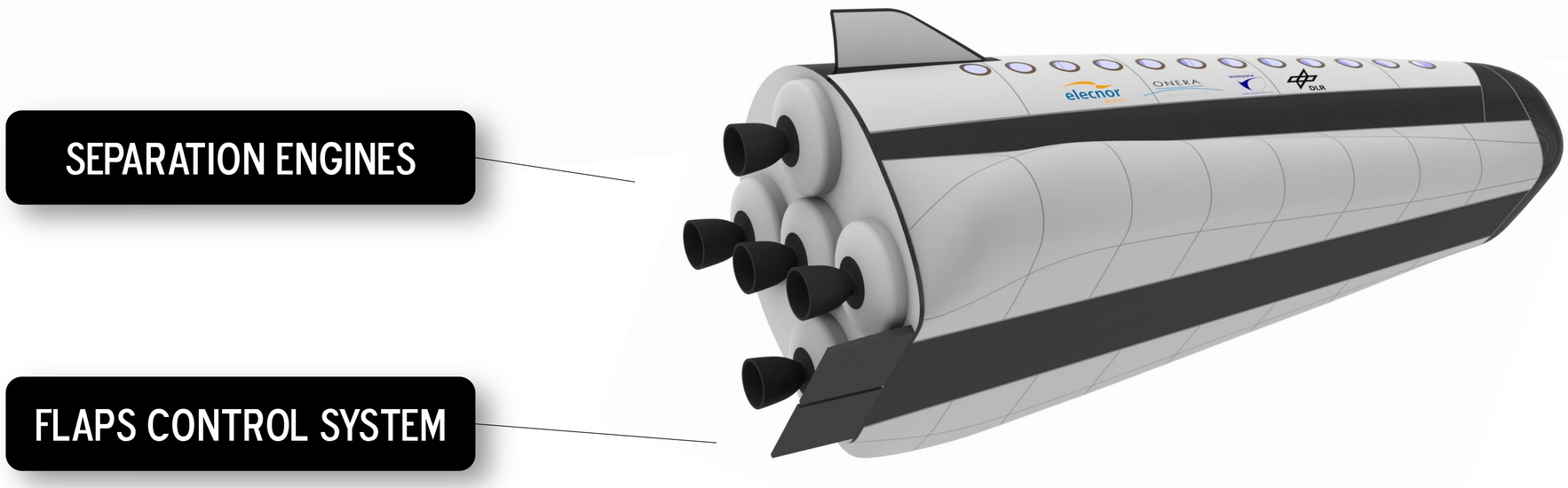

HYPMOCES is a project (Contract Number: FP7-3415531) co-funded by the European Community's Programme for International Cooperation under the 7th Framework Programme for Research and Technological Development (2013-2015).